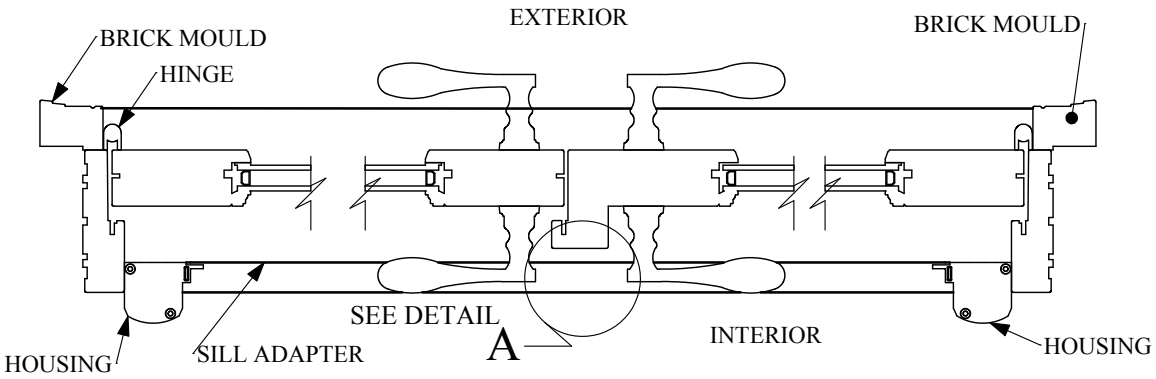

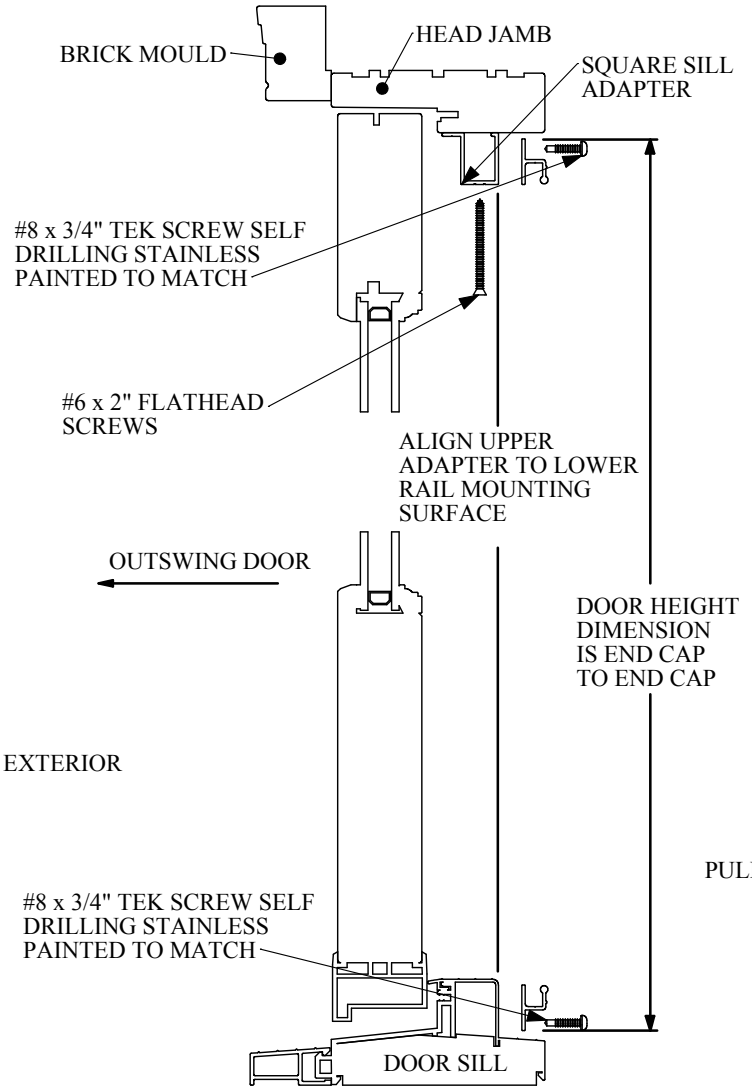

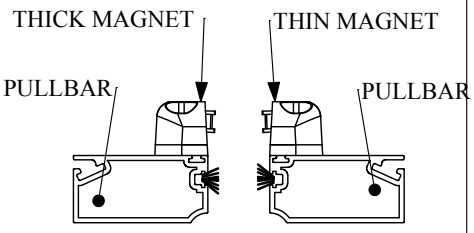

DETAIL A

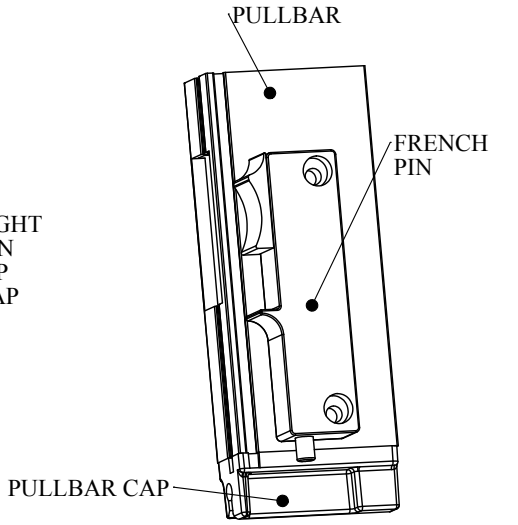

FRENCH DOOR PIN USED TO LOCK THE PULLBAR IN PLACE BOTH TOP AND BOTTOM

StowAway
RETRACTABLE SCREENS

TYPE:	FRENCH DOOR
OPERATION:	OUTSWING FRENCH DOOR
SILL ADAPTER:	#5 SQUARE ADAPTER (TOP)

UPDATED: 11/7/08 B